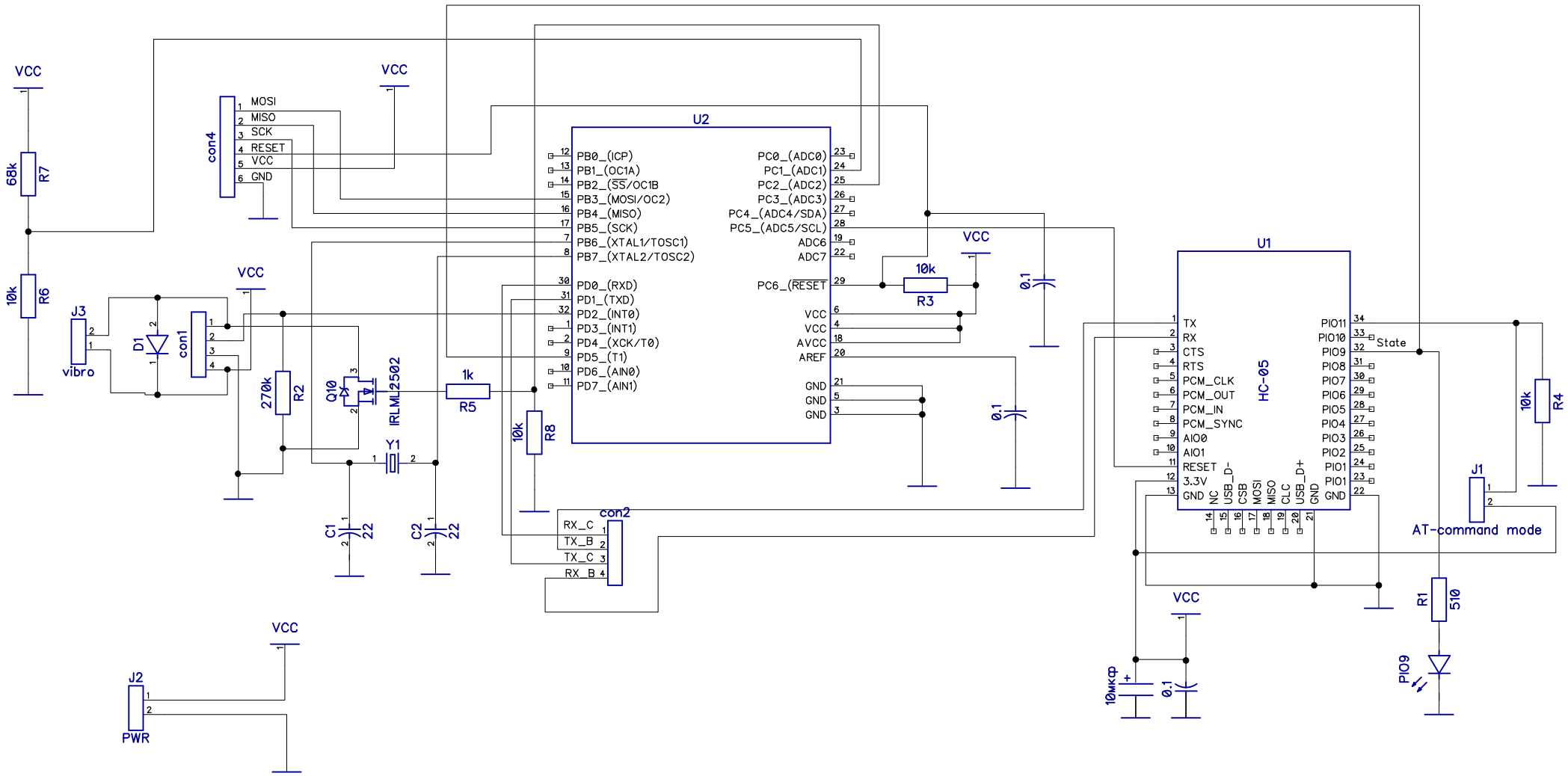
VCC
68k
R7
10k
R6
J3
vibro
D1
con1
270k
R2
Q10
IRLML2502
1k
R5
Y1
C1
22
C2
22
con4
MOSI
MISO
SCK
RESET
VCC
GND
U2
PB0_(ICP)
PB1_(OC1A)
PB2_(SS/OC1B
PB3_(MOSI/OC2)
PB4_(MISO)
PB5_(SCK)
PB6_(XTAL1/TOSC1)
PB7_(XTAL2/TOSC2)
PD0_(RXD)
PD1_(TXD)
PD2_(INT0)
PD3_(INT1)
PD4_(XCK/T0)
PD5_(T1)
PD6_(AIN0)
PD7_(AIN1)
PC0_(ADC0)
PC1_(ADC1)
PC2_(ADC2)
PC3_(ADC3)
PC4_(ADC4/SDA)
PC5_(ADC5/SCL)
ADC6
ADC7
PC6_(RESET
VCC
VCC
AVCC
AREF
GND
GND
GND
10k
R3
0.1
0.1
10k
R8
con2
RX_C
TX_B
TX_C
RX_B
U1
HC-05
TX
RX
CTS
RTS
PCM_CLK
PCM_OUT
PCM_IN
PCM_SYNC
AIO0
AIO1
RESET
3.3V
GND
NC
USB_D-
CSB
MOSI
MISO
CLC
USB_D+
GND
PIO11
PIO10
PIO9
PIO8
PIO7
PIO6
PIO5
PIO4
PIO3
PIO2
PIO1
PIO1
GND
State
10k
R4
J1
AT-command mode
R1
510
PIO9
10мкф
0.1
J2
PWR